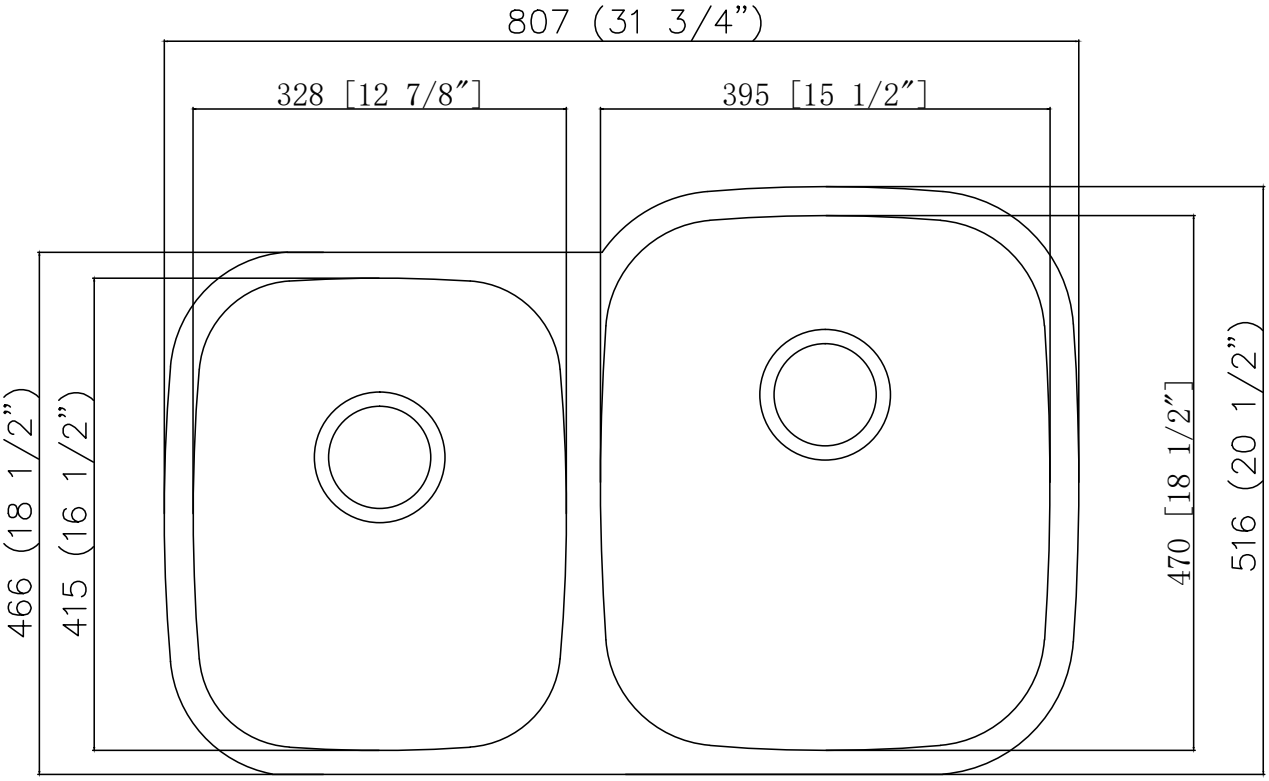
807 (31 3/4")
328 [12 7/8"]
395 [15 1/2"]
466 (18 1/2")
415 (16 1/2")
470 [18 1/2"]
516 (20 1/2")

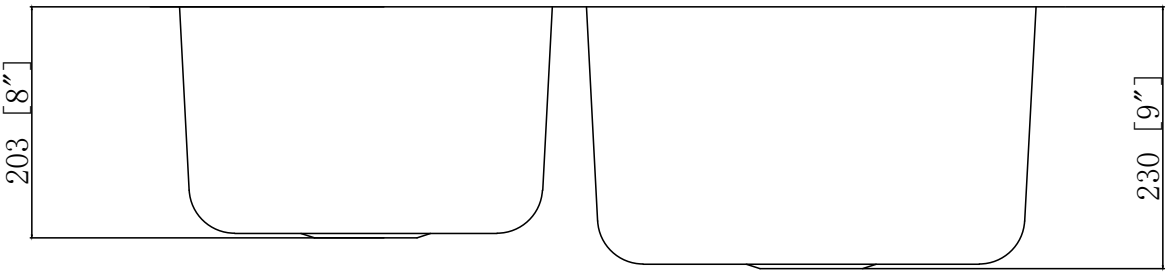
203 [8"]
230 [9"]